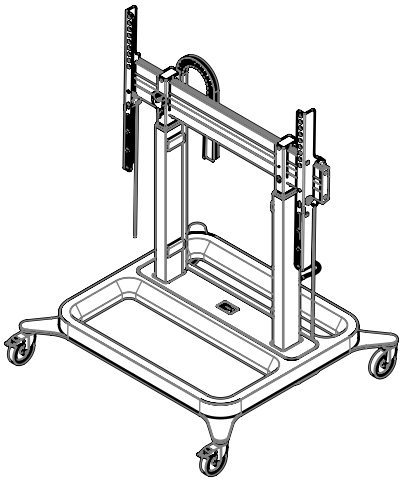

Product data sheet

RISE 5208 Motorized display lift trolly 80 mm/s

Dimensions in mm [inch]

Screen sizes:	55 inch - 98 inch
Max load:	120 kg / 264.5 lbs
Net weight:	40,3 kg / 88.8 lbs
Gross weight:	44,7 kg / 98.5 lbs

Power supply:	100-240V ~ 50/60Hz
Rated current:	EU/UK: 6A, US/CA: 15A
Power consumption lift system:	400W
Max power external devices:	900W

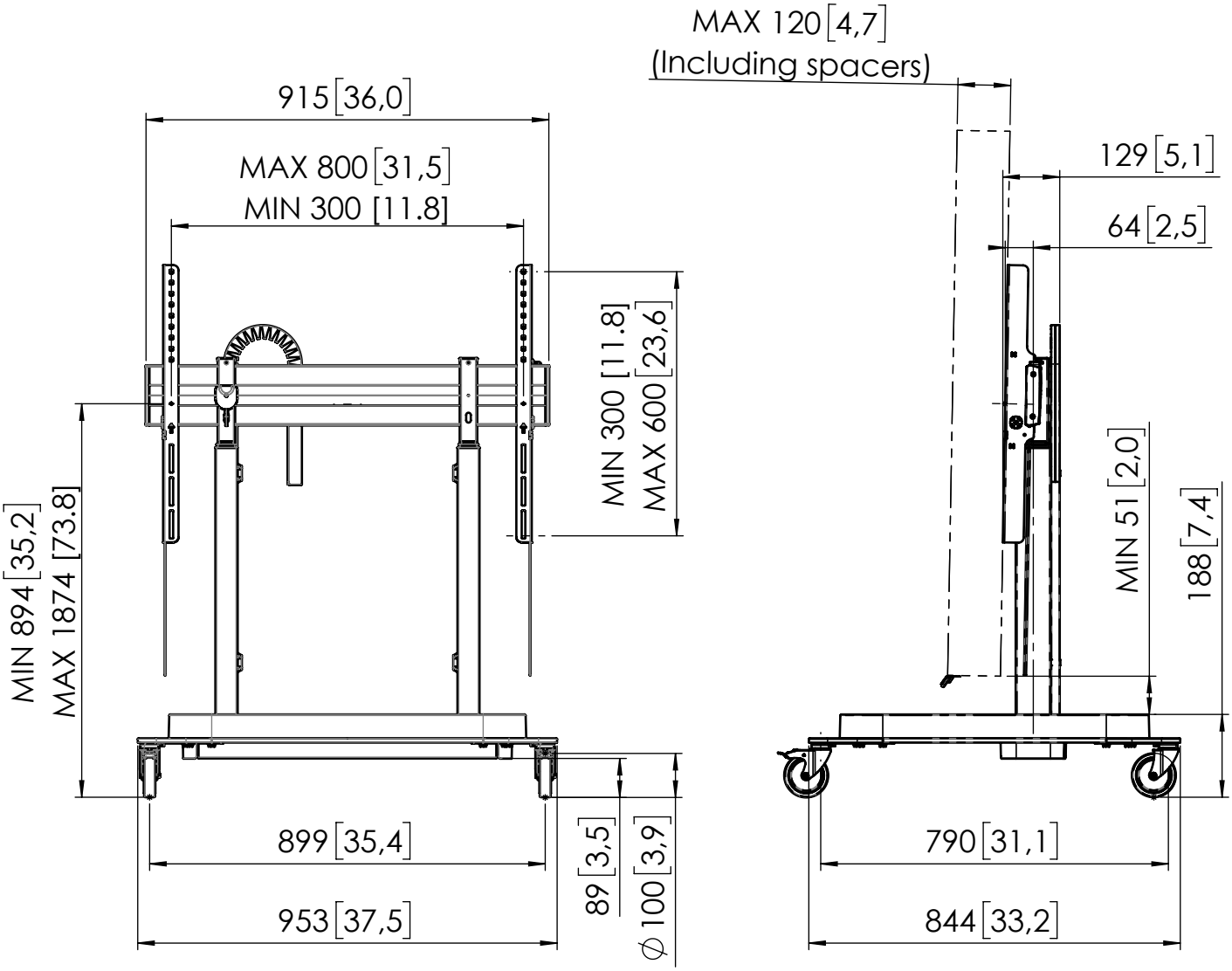

Note: This document and specifications herein are confidential and the exclusive property of Vogel's Products b.v. Neither this design nor any information contained in this drawing may be reproduced or disclosed to others without written consent of Vogel's Products b.v. The design and information will not be reproduced, copied or used, either in part or in its entirety, as the basis for the manufacture or sale of items without written permission.
Warning: Please study all instructions and illustrations carefully before installation.
Information in this document is subject to change without further notice.