REVISION HISTORY DF020-002150-01			
REV	DESCRIPTION OF CHANGE	BY	REV DATE
01	INITIAL RELEASE	AL	08/25/2023

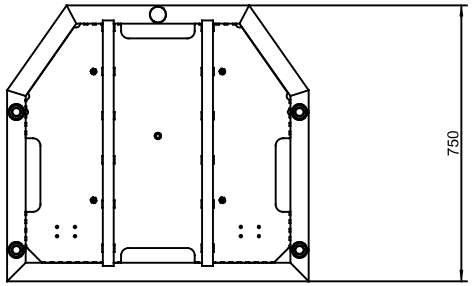

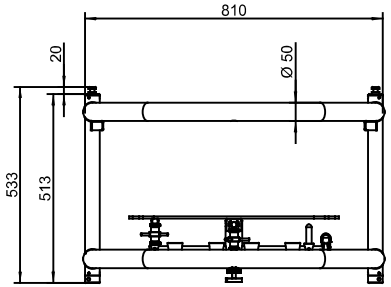

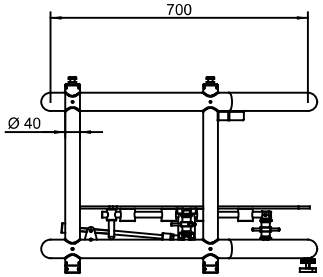

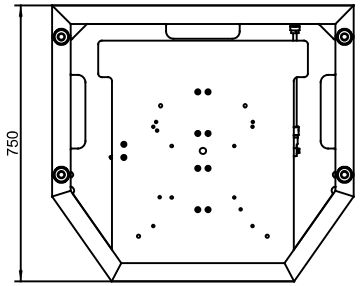

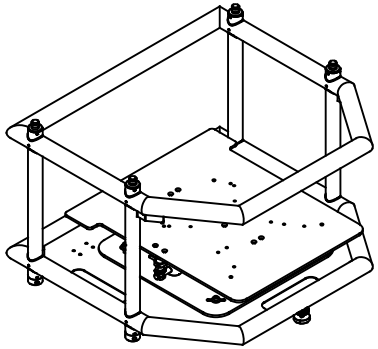

UNITS INCHES ☐ MILLIMETRES ☒

UNLESS OTHERWISE SPECIFIED
INTERPRET DIMENSIONS AND TOLERANCES
PER ASME Y14.5M-1994

TOLERANCES APPLY AS SHOWN BELOW

DECIMAL PLACES	INCHES	MILLIMETRES
XXX	± .063	± 1.6
XX	± .025	± .6
X	± .250	± 6.3

ANGULAR DIMENSIONS	
XX°	±1.0°
XX.X°	±0.5°

DRAWN BY:	ALEX. LIU
DRAWN DATE:	08/25/2023
APPROVED BY:	LANG
APPROVAL DATE:	08/25/2023

PROPRIETARY
NOT TO BE DISCLOSED OR REPRODUCED IN
ANY FORM WITHOUT THE WRITTEN
CONSENT OF
CHRISTIE

THIRD ANGLE PROJECTION

CHRISTIE

CHRISTIE DIGITAL SYSTEMS USA, INC.
CHRISTIE DIGITAL SYSTEMS CANADA, INC.

PART DESCRIPTION: Line-DWG Line One RIG FRM V2

SIZE: E | PART NUMBER: 020-002150-01 | REVISION: 01

SCALE: 1:3 | WEIGHT: - LBS (- KG) | SHEET 1 OF 1