EVO-12

Full Range Cabinet - Line Source

- Power: LF 1000 W + HF 250 W
- Bandwith (-6dB): 50 Hz to 18 KHz
- Sensitivity: 90 dB / 1 W
- SPL MAX: 120 dB @2m
- Directivity (-6dB): H 90° x 40°
- Horizontal coupling of 2 EVO12: 120°
- **LF:** 1 x HP 12'' double wave loudspeaker
- **MF:** 4 x HP 4'' bass-reflex speakers
- **HF:** 1 x Compression 1'' + wave guide
- Rigging: 2 x commutable sockets M10/20
- 4 rails aerodeck type
- 4 transport handles
- CTP Finland Birch 18/30 mm
- Finished Polyurethane painting
- Dimensions: H559 x D530 x W406 mm
- Weight: 27 kg (passive) / 30 kg (active)

EVO-12P: Passive Version 1250 W

- 2 Ways 1000 W + 250 W
- Nominal Impedance: 8 Ω
- Connections: 2 speakon NL4 Connectors
- To be used with Hortus EVO12P presets

EVO-12A: Active Version 1250 W

- Pascal Audio 1000 W + 250 W Amplification
- DSP ALL DSP
- RJ45 Port for programming
- In/Link on XLR 3 pins
- Powercon In/Out Power supply

FC-2EVO12: Flight-case option for 2 x EVO12

EVO-15B

Bass Cabinet for EVO12

- Power: 1000 W
- Bandwidth: 37 Hz to 200 Hz
- Sensibility: 90 dB /1W @1m
- SPL MAX: 127 dB
- Directivity: Half directional 180°
- **LF:** 1 x HP 15'' Double wave loudspeaker
- Rigging: 1 Flange for 35mm tube, 4 rails aerodeck type
- 4 transport handles
- CTP Finland Birch 18/30 mm
- Finished Polyurethane painting
- Dimensions: H674 x D627 x W406 mm / 43 Kg

Passive Version:

- 1000 W
- Nominal Impedance: 8 Ω
- Connections: 2 speakon NL4MP connectors
- To be used with Hortus EVO15P presets

Active Version 1000 W :

- Pascal Audio 1000 W Amplification
- DSP ALL DSP
- RJ45 Port for programming
- In/Link on XLR 3 Pins
- Powercon in/out Power Supply

FC-2EVO15B : Flight-case option for 2 x EVO15B

EVO-12 - FREQUENCY RESPONSE

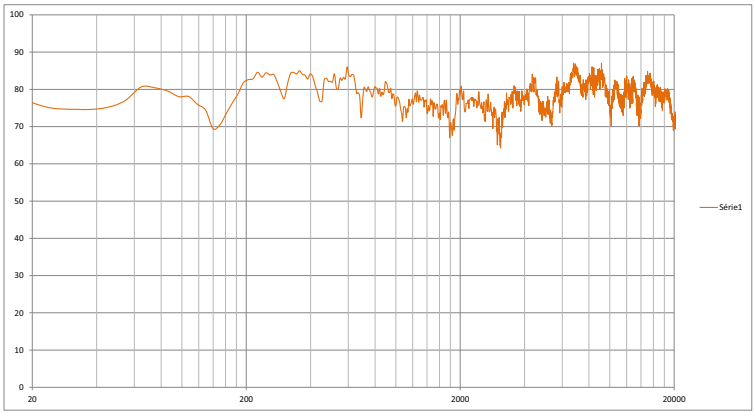

EVO-12 - DIRECTIVITY

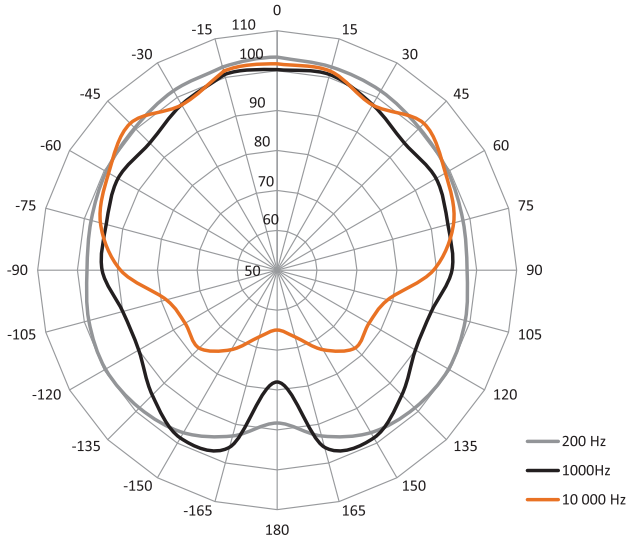

EVO-12 - DIMENSIONS (MM)

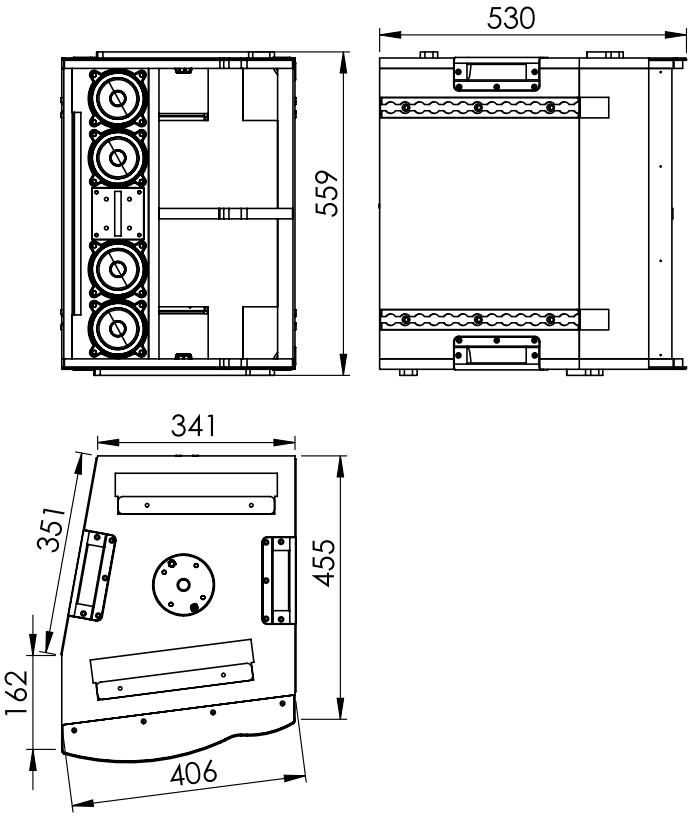
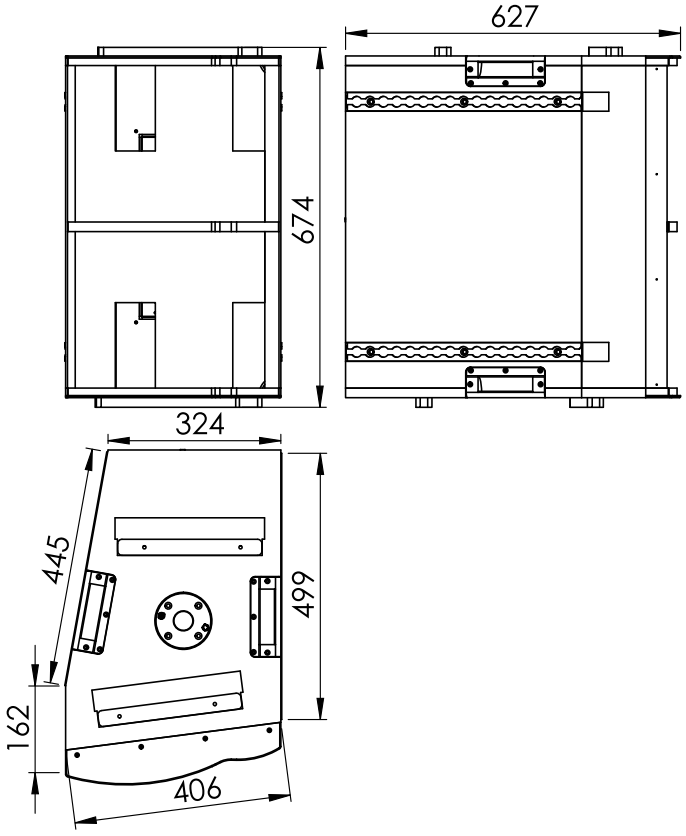
EVO-15 - DIMENSIONS (MM)