vogel's | expanding experiences

Product data sheet

PFW 6400

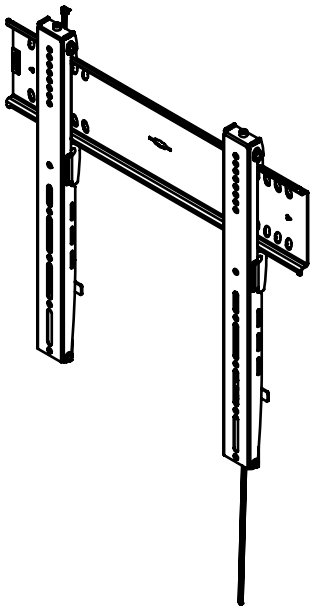

Screen mounting kit:

4X M8X30 BOLT PROF POZI2/KW10 DRIVE
4X M8X16 BOLT PROF POZI2/KW10 DRIVE
4X M6X30 BOLT PROF POZI2/KW10 DRIVE
4X M6X16 BOLT PROF POZI2/KW10 DRIVE
8X SPACER 5MM
4X M8 WASHER

4X M8X30 PINLOCK DRIVE
4X M8X16 PINLOCK DRIVE
4X M6X30 PINLOCK DRIVE
4X M6X16 PINLOCK DRIVE
1X PINLOCK ALAN KEY

Dimensions in mm [inch]

Screen sizes:	46 INCH TO 65 INCH
Max weight:	100KG

Wall mounting kit:

6X SREW/BOLT PROF SW13 7X80
6X FISCHER PLUG UX10

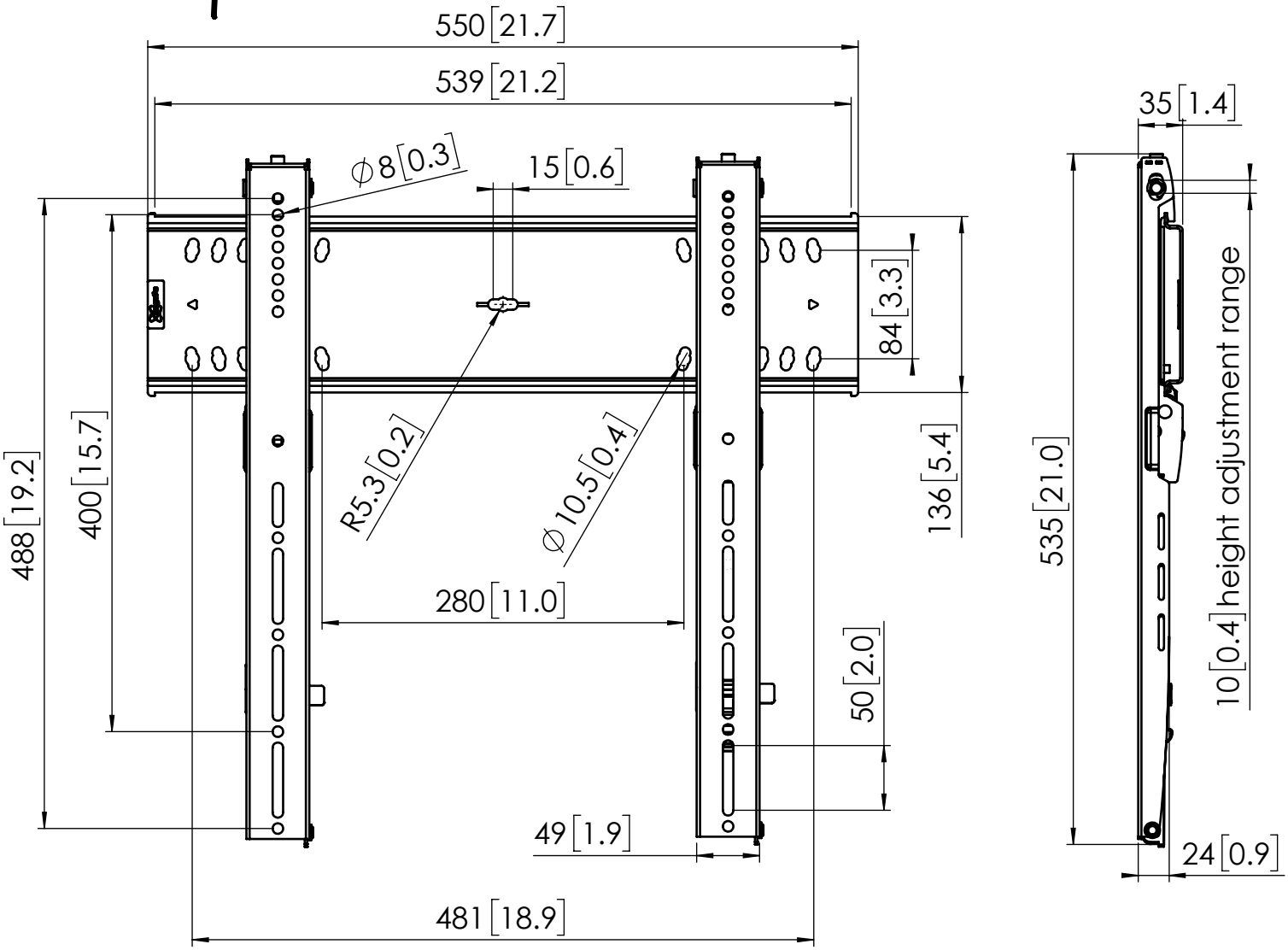

Note: This document and specifications herein are confidential and the exclusive property of Vogel's Products b.v. Neither this design nor any information contained in this drawing may be reproduced or disclosed to others without written consent of Vogel's Products b.v. The design and information will not be reproduced, copied or used, either in part or in its entirety, as the basis for the manufacture or sale of items without written permission.
Warning: Please study all instructions and illustrations carefully before installation.
Information in this document is subject to change without further notice.