UV601E0&E2

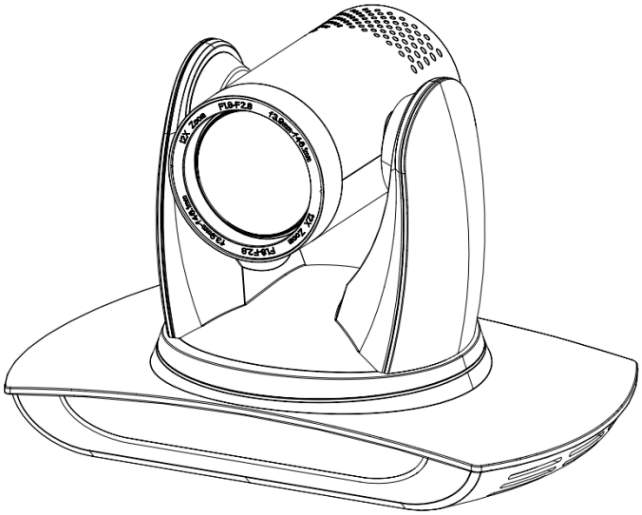

This series camera offers perfect functions, superior performance and rich interfaces. The features include advanced ISP processing algorithms to provide vivid images with a strong sense of depth, high resolution and fantastic color rendition. It supports H.265/H.264 encoding which makes motion video fluent and clear even with less than ideal bandwidth conditions.

- **Full HD Image:** It employs 1/2.8 inch high quality CMOS sensor. Resolution is up to 1920x1080 with frame rate up to 60 fps.
- **Various Optical Zoom Lens:** It has 12X/20X optical zoom lens for options.
- **Leading Auto Focus Technology:** Leading autofocus algorithm allow the camera to focus swiftly, accurately, and stably.
- **Low Noise High SNR:** Low noise CMOS effectively ensure the camera's ultra-high SNR. 2D&3D noise reduction technology furtherly reduce the noise without image comprising.
- **Multi Video Outputs:** Support HDMI, SDI, USB2 and wired LAN (POE optional) ; the SDI support for 100m transmission at 1080p60 format.
- **Multi Audio Video Compression Standards:** Support H.265/H.264 video compression, support AAC、MP3、G.711A audio compression; support up to 1920x1080 resolution 60 frames/second compression;

- **Audio Input Jacket:** Support 16000, 32000, 44100, 48000 sampling frequency, support AAC、MP3、G.711A audio coding.
- **Multiple Network Protocols:** Support ONVIF, GB/T28181, RTSP, RTMP protocols, and also support RTMP push mode, easily link to streaming media servers (Wowza, FMS); support RTP multicast mode; support network full command VISCA control protocol
- **Control Interface:** RS485, RS232: RS232 supports cascading connection, which is convenient for engineering installation and use.
- **Multiple Control Protocols:** Support VISCA, PELCO-D, PELCO-P protocol, and support automatic identification protocol.
- **Super Quiet PTZ:** High-precision stepping motors and precision motor drive controllers ensure that the pan/tilt runs smoothly at low speeds.
- **Low-power Sleep Function:** Support low-power sleep/wake up, the consumption is lower than 400mW under sleep mode
- **255 Presets Positions:** Up to 255 presets (10 presets by remoter).
- **Various Remote Controls:** Support IR remote control and wireless remote control
- **Wide Application:** Applied in remote education, lecture recording, video conference, online training, and tele-medicine.

Technical Specification

Parameter/Model	**12X**	**20X**
Camera Lens		
Image Sensor	1/2.8 inch high quality HD CMOS sensor	
Effective Pixel	16:9, 2.07 megapixel	
Video Signal	**HDMI/SDI**: 1080P60/50/30/25/59.94/29.97；1080I60/50/59.94；720P60/50/59.94/ **U2**: 320x240/352x288/640x360/640x480/704x576/704x480/720x576/800x448/800x600/960x540/1024x576/1024x768/1280x720/1920x1080P30/25/20/15/10/5	
Optical Zoom	12X	20X

	f=3.9～46.8mm	f＝5.5～110mm
Viewing Angle	6.6°（N）70.4°（W）	3.3°（N）54.7°（W）
Iris	F1.8 – F2.4	F1.6 – F3.5
Digital Zoom	X10	
Minimum Illumination	0.5Lux(F1.8, AGC ON)	
DNR	2D & 3D	
White Balance	Auto/Manual/One-push 3000K/3500K/4000K/4500K/5000K/5500K/6000K/6500K/70000K	
Focus	Auto/Manual/One-push	
Iris	On/off	
Electronic Shutter	On/off	
BLC	On/off	
Dynamic Range	Off/dynamic level adjustment	
Video Adjustment	Brightness, Contrast, Sharpness, Horizontal Flip, Vertical Flip(display when auto flip off), BW Mode, Gamma Curve, Electronic Zoom, DCI, Lens Distortion Calibration	
SNR	>55dB	

Interface Parameter	
Interfaces	HDMI, SDI, LAN(Support POE), USB2.0, A-IN, RS232-IN, RS232-OUT, RS 485, Rotary Dial, DC12V Power Switch.
Video Output	HDMI, SDI, LAN, USB2.0
Video Compression Format	LAN：H.264, H.265 USB 2.0：MJPG, H264, H.265, YUY2, NV12
Audio Input Interface	Double track 3.5mm linear input;
Audio Output Interface	HDMI, LAN, USB2.0
Audio Compression Format	AAC, MP3, G.711A

LAN Interface	100M network port (10/100BASE-TX); 5GWiFi (optional)
Network Protocol	RTSP/RTMP,ONVIF,GBT28181 Support network VISCA control protocol; Support remote upgrade, remote restart, remote reset
Control Interface	RS232-IN, RS232-OUT, RS485
Serial Port Communication Protocols	VISCA/Pelco-D/Pelco-P； Support Baudrate: 115200/38400/9600/4800/2400
USB Communication Protocol	UVC（Video Communication Protocol），UAC（Audio Communication Protocol）
Power Supply	HEC3800 Power Socket(DC12V)
Power Adapter	Input: AC110V~AC220V ；Output: DC12V/1.5A
Input Voltage	DC12V±10%
Input	<1A
Consumption	<12W

PTZ Parameter	
Pan Move	-170°～+170°
Tilt Move	-30°～+30° °
Pan Speed	0.1°/s～100°/s
Tilt Speed	0.1°/s～30°/s
Preset Speed	Pan：60°/s，Tilt：30°/s
Preset Quantity	Up to 255 preset (10 via remote control)

Other Parameter	
Storage Temperature	-10℃～+60℃
Storage Humidity	20%～95%
Working Temperature	-10℃～+50℃
Working Humidity	20%～80%
Dimension	253.5（L）mm×144mm（W）×169mm（D）
Weight	1.46kg
Environment	Indoors
Accessory	
Supplied Accessory	Power Adapter, RS232 Cable, Remote Control, User Manual
Optional Accessory	Mounting Bracket
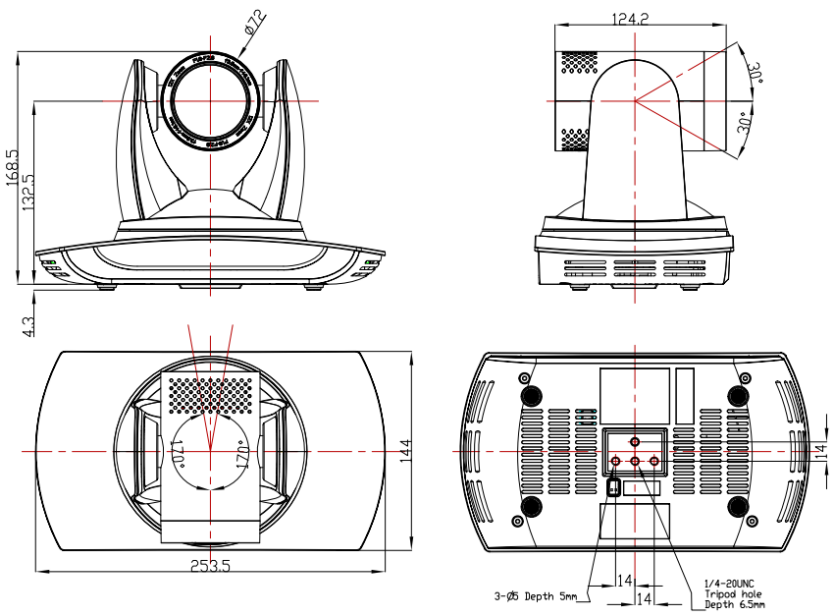
Dimension